Metrological Characterization of a Method for Blood Pressure Estimation Based on Arterial Lumen Area Model

Iraj Koohi, Izmail Batkin, Voicu Z. Groza, *Fellow, IEEE*, Shervin Shirmohammadi, *Fellow, IEEE*, Hilmi R. Dajani, *Senior Member, IEEE*, and Saif Ahmad

***Abstract*— Accuracy of blood pressure (BP) measurement is a challenging issue in oscillometry. Most of the automated noninvasive BP monitors estimate BP from envelope of the measured oscillometric pulses. The peak and the trough of the oscillometric pulses are very sensitive to noise caused by breathing, heart-rate variability, motion artifacts, muscle contraction, and environmental noise. Therefore, accuracy of the estimated BP based on the oscillometric waveform envelopes is not reliable in some cases. Recently, employing a modeling approach to estimate BP, we obtained the accurate results for a set of healthy subjects. The method is based on the lumen area oscillations model and estimates BP by comparing the actual and corresponding simulated waveforms. The method's accuracy worsened when we tested it on a broader range of healthy subjects, while a significant drop was observed when the method was used for patients with chronic cardiovascular diseases. The work presented in this paper represents an improved version of our previous approach. We tested the proposed method on both healthy subjects and patients with chronic cardiovascular diseases, and compared the results to two popular BP estimation algorithms: maximum amplitude algorithm and maximum/minimum slope algorithm. We observed up to 56.7% and 57.3% improvements in mean absolute error, 98.9% and 64.4% improvements in mean error, 50% and 59% improvements in standard deviation of errors, and up to 57.6% and 55.8% in measurement uncertainty for the estimated systolic and diastolic pressures, respectively.**

***Index Terms*— Arterial lumen area (ALA) oscillations simulator, arterial pressure, blood pressure (BP) measurement, compliance parameter, maximum amplitude algorithm (MAA), maximum/minimum slope algorithm (MMSA), oscillometry, regression model.**

I. Introduction

OSCILLOMETRY is the most popular noninvasive technique for automatic estimation of blood pressure (BP) as it can be relatively easily implemented in automated BP measurement devices [1]–[3]. In oscillometry, an inflatable cuff is wrapped around the subject's wrist or upper arm and is inflated to a suprasystolic BP at which the vessel underneath the cuff is completely occluded. The cuff pressure (CP) is then slowly deflated to a subdiastolic BP (SDBP) which is the minimum CP required to record the cuff deflation curve (CDC) which is the pressure oscillations within the cuff [4]–[10]. The resulting oscillometric waveform (OMW) contains oscillometric pulses that are induced into the cuff by the arterial BP pulses over the cuff deflation period. Several techniques, such as filtering [7] and detrending [11], are used to extract the OMW from the CDC. Most of the automated oscillometric devices estimate BP from OMW envelope (OMWE) of the oscillometric pulses. The OMWE is formed by subtracting troughs of the oscillometric pulses from corresponding peak amplitudes [12]. Mean arterial pressure (MAP), which is the average BP across arterial tree, coincides with the CP at which the envelope attains maximum [13].

One of the biggest challenges of automated oscillometric monitoring devices is the accuracy of the measured BP. Accurate estimation of BP can save many human lives, especially for patients who require monitoring of the BP at home. The study in [14] suggests that a 3–4 mmHg increase in SBP translates into 20% higher stroke mortality and 12% higher mortality from ischemic heart diseases. Therefore, even small errors in the estimated BP could have large consequences on health condition of patients [15], especially for patients with chronic cardiovascular diseases, such as arterial stiffness and atrial fibrillation [16].

Accuracy depends on the embedded estimation algorithm that estimates systolic BP (SBP) and diastolic BP (DBP) from the recorded oscillometric pulses [1]. Many studies have been carried out to improve accuracy of the oscillometric methods [17]–[19]. Most of them estimate BP from the oscillometric envelope. For example, the maximum amplitude algorithm (MAA) estimates SBP and DBP by adopting two empirical systolic and diastolic ratios, respectively [7]. The main problem of this technique is that the estimation is based on the empirical criteria depending on the envelope which is not unique, especially over a broad range of subjects. Another technique called maximum/minimum slope algorithm (MMSA) estimates SBP and DBP from the maximum and minimum slopes of the envelope, respectively [13]. This technique is coefficient-free, but not reliable in some cases, because the estimation is based on the oscillometric envelopes [20]. In addition, envelopes are pushed up and down by human breathing activity during the measurements, and hence, they are modulated with the breathing effect noise as well. Although breathing effect can be removed by advanced

Manuscript received September 17, 2016; revised January 5, 2017; accepted January 5, 2017. The Associate Editor coordinating the review process was Dr. Domenico Grimaldi.

The authors are with the School of Electrical Engineering and Computer Science, University of Ottawa, Ottawa k1N 6N5, ON, Canada.

Color versions of one or more of the figures in this paper are available online at http://ieeexplore.ieee.org.

Digital Object Identifier 10.1109/TIM.2017.2657978

filtering techniques [21], the envelope remains contaminated with other noise such as motion artifacts, muscle contraction, or environmental noise that can corrupt the oscillometric envelope. Therefore, accuracy of the estimated BP relies on the accuracy of the envelope and acquiring an accurate envelope is a crucial step in oscillometric BP measurements.

In this paper, we have extended our previously proposed method [22] for BP estimation from the arterial lumen area (ALA) oscillations model in the diastolic region over a broader range of healthy subjects. Moreover, the extended method (ALA-based) provides accurate estimation of the BP with subjects who are obese and patients with chronic cardiovascular diseases. The diastolic region over the cuff deflation period is the region, where the arterial pressure is greater than or equal to the CP, while the systolic region is the region where the arterial pressure is less than the CP. In our previous work [22], we estimated BP accurately by processing the oscillometric pulses over a constant range (80/20 mmHg) of the deflating CP for all subjects. Moreover, the results were validated against a commercial BP monitor (Omron) which was Food and Drug Administration (FDA) approved, but not hospital-grade. The previous approach was accurate over a specific data set including 150 recordings acquired from ten healthy subjects (DS2 in this paper), but accuracy decreased significantly when we tested the old method on a broader range of healthy subjects with a wider range of ages (DS1 in this paper), and validated the results with the corresponding accurate reference values employing the auscultatory method as gold standard. More importantly, we could not observe acceptable results when we tested the old method on another data set including obese subjects and patients with cardiovascular diseases (DS3 in this paper). To this end, we changed the constant range (80/20 mmHg) to a dynamic range from MAP to SDBP known as the diastolic region. In order to find an accurate MAP, we employed the dynamic threshold algorithm (DTA) [23] to select the pulse at MAP and to determine the corresponding CP as MAP. With the new approach, we could get more pulses to process and estimate unknown parameters of the ALA model more accurately. This method employs the compliance parameter "c" that was previously estimated through an optimization process. The optimization process was time-consuming, especially for the new approach with more oscillometric pulses. To this end, we derived a linear regression model to estimate the "c" directly from the corresponding amplitude ratio of the oscillometric pulse at MAP. As a result, after we applied the extended method (ALA-based), we observed significant improvements in accuracy of the results over all data sets, including healthy and sick subjects.

We adopted the ALA model [24], [25] to construct simulate version of the OMW corresponding to the actual recordings. Actual ($\mathrm{OMW_{act}}$) and corresponding simulated ($\mathrm{OMW_{sim}}$) OMWs are compared to optimize the model's arterial pressures at the peak and trough of the oscillometric pulses in the diastolic region and estimate SBP and DBP, respectively. The parameter "c" of the model which is the compliance parameter is estimated from a developed linear regression model. In order to estimate the parameter "c," arterial pressure and ALA oscillations simulators [13] are employed and customized to construct the $\mathrm{OMW_{sim}}$ corresponding to the $\mathrm{OMW_{act}}$. Parameter "c" is obtained by minimizing the differences between the amplitude ratios of the actual (R_{act}) and the corresponding simulated (R_{sim}) oscillometric pulses at MAP. In order to calculate amplitude ratios, DTA [23] was employed to locate the oscillometric pulse at MAP.

Two different data sets of healthy subjects and one data set of patients with chronic cardiovascular diseases were employed to evaluate our proposed method. Results were validated against references and compared with the corresponding results from the MAA and MMSA estimation algorithms, and improvements are discussed in Section IV.

II. Methodology

It is generally accepted that the information pertaining to SBP and DBP is embedded in CDC, and that is why CDC is the focus of all oscillometric estimation algorithms [8]. The CDC is composed of a slow-varying component due to the deflating CP, and the oscillating component due to the pressure pulsations in the artery. The oscillating component (OMW) is extracted from the CDC. All oscillometric estimation algorithms, including our proposed ALA-based method, require the OMW to estimate BP.

There are two main approaches to extract the OMW from CDC: namely, the filtering [9] and detrending [10]. The filtering method removes the frequency components of the deflating CP and keeps the frequency components of the OMW. Generally, the lower cutoff frequency for high-pass or bandpass filters is set between 0.3 and 0.5 Hz, and the upper cutoff frequency for bandpass filters is set around 20 Hz in order to eliminate the high frequency noise.

In the detrending method, a curve of best fit representing the deflating CP is constructed and subtracted from the recorded CDC. Fitting the line requires locating the beginning of each oscillometric pulse on the CDC. These points are then joined together to construct a line corresponding to the decreasing CP. In order to compare the accuracy of the proposed ALA-based method with MAA and MMSA, we have implemented the MAA and MMSA estimation algorithms.

A. Maximum Amplitude Algorithm

The MAA is the most popular estimation algorithm that estimates BP from the OMWE. The MAP is equal to CP at which the envelope attains maximum. The SBP and the DBP are linearly related to the maximum amplitude of the envelope by applying two empirical systolic (r_s) and diastolic (r_d) ratios, respectively. These ratios serve to determine the time points at which the CP coincides with the SBP and DBP, respectively [9] (see Fig. 1). The ratios are empirically determined over the specific population of the subjects, so may not estimate BP accurately over a broader range of subjects, because these parameters are different for individuals with different cardiovascular systems and vary between different health conditions, age, or populations [11].

B. Maximum/Minimum Slope Algorithm

The MMSA uses the OMWE and estimates SBP and DBP from the maximum and minimum slopes of the envelope in

This article has been accepted for inclusion in a future issue of this journal. Content is final as presented, with the exception of pagination.

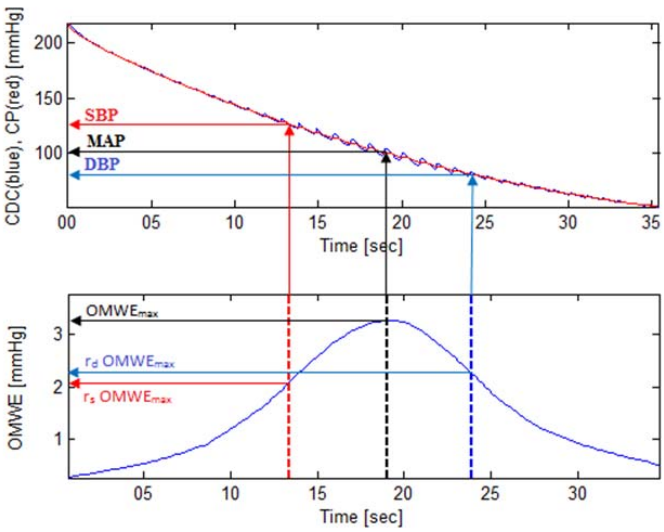

Fig. 1. Procedure of the MAA. CDC of a sample BP recording (top, blue). Curve of best fit presenting the CP (top, red). OMWE (bottom). CP at which the OMWE attains maximum is determined as MAP. CP at which the OMWE becomes equal to $r_s \cdot \mathrm{OMW}_{\max}$ is determined as SBP. CP at which the OMWE becomes equal to $r_d \cdot \mathrm{OMW}_{\max}$ is determined as DBP.

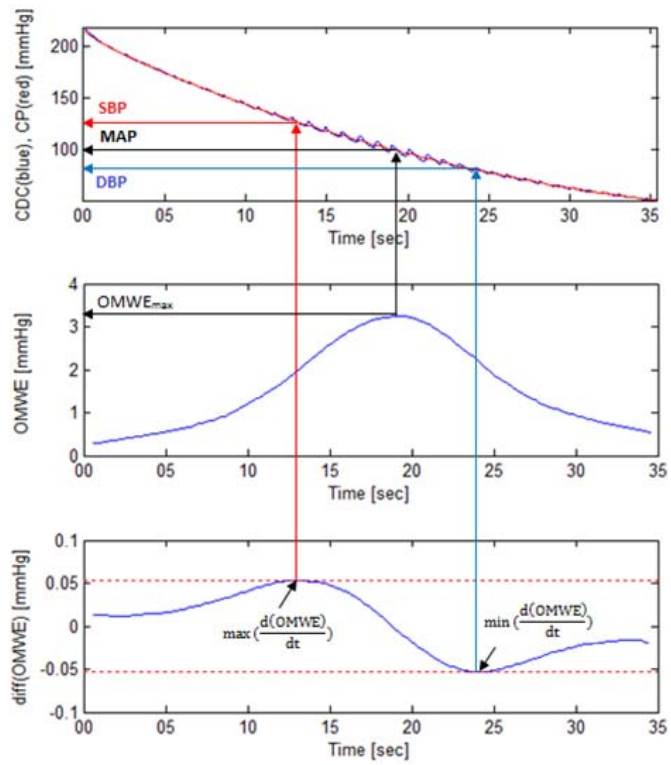

Fig. 2. Procedure of the MMSA. CDC of a sample BP recording (top, blue). Curve of best fit presenting the CP (top, red). OMWE (middle). First derivative of the OMWE (bottom). CP at which the OMWE attains maximum is determined as MAP. CP at which the first derivative of the OMWE becomes maximum is determined as SBP. CP at which the first derivative of the OMWE becomes minimum is determined as DBP.

the systolic and diastolic regions, respectively. Similar to the MAA, MAP is equal to CP at which the envelope attains maximum. The SBP and the DBP are equal to CPs at which the first derivative of the envelope becomes maximum and minimum, respectively [11] (see Fig. 2). MMSA is coefficient-free and estimates BP without adopting the empirical ratios, but is still very sensitive to noise such as motion artifacts.

III. Characterization of the ALA-Based Method

The ALA-based method is based on a modeling approach that estimates accurate BP from the ALA model in the diastolic region for both healthy and sick subjects with cardiovascular diseases. The ALA model in (14) is employed [24], [26] to estimate BP from peak and trough amplitudes of the recorded oscillometric pulses in the diastolic region.

In order to determine the compliance parameter "c" of the model in (14), a linear regression model [13] is derived from the ALA model in (3) and the parameter "c" is estimated directly from the amplitude ratio of the corresponding oscillometric pulse at MAP (R_{act}).

A. Estimation of the Compliance Parameter 'c'

The compliance parameter "c" has significant effect on the BP oscillations. Therefore, compliance parameter is determined accurately prior to BP estimation. In order to determine "c," we investigated the correlation between "c" and the corresponding actual OMW for each recording. The compliance of the vessel underneath the cuff is maximum at MAP, so the oscillometric pulse at MAP is the best pulse to investigate its relation with the "c." The ALA model in (3) is adopted [13] to investigate the correlation of its parameter "c" with corresponding R_{act}over all recordings of DS1. R_{act} in (2) is calculated by dividing peak amplitude (pk) of the oscillometric pulse at MAP to the absolute value of the trough amplitude (|tr|): $R_{\mathrm{act}} = \mathrm{pk}/|\mathrm{tr}|$. The DTA [23] is employed to locate the oscillometric pulse at MAP and estimate CP at the located pulse ($\mathrm{MAP}_{\mathrm{DTA}}$) by averaging the CPs at the beginning and the end points of the selected pulse. The DTA compares the amplitude ratios of all oscillometric pulses with a threshold TR, calculated in (1) and selects the oscillometric pulse at MAP as the one with the closest amplitude ratio to TR

$$\mathrm{TR} = \frac{[1-(0.33+0.0012\mathrm{HR})]}{(0.33+0.0012\mathrm{HR})} \tag{1}$$

$$R_{\mathrm{act}} = \left[\frac{\mathrm{pk}_{\mathrm{act}}}{|\mathrm{tr}_{\mathrm{act}}|}\right]_{P_a=\mathrm{MAP}} \tag{2}$$

where TR is the threshold, HR is the heart-rate in beats/min, R_{act} is the amplitude ratio of the actual oscillometric pulse at MAP, and$\mathrm{pk}_{\mathrm{act}}$ and $\mathrm{tr}_{\mathrm{act}}$ represent peak and trough amplitudes of the actual oscillometric pulse at MAP.

To derive the regression model, the ALA model in (3) is employed [13] to determine the parameter "c" of the model and investigate the correlation between "c" and corresponding R_{act} from the actual waveforms. Due to the good correlation of 98% between "c" and the corresponding R_{act} value, we derived a linear regression model

$$A(t) = d\frac{\ln(aP_t(t)+b)}{1+e^{-cP_t(t)}}. \tag{3}$$

In order to derive the regression model, parameter "c" of the model in (3) is optimized by minimizing the differences

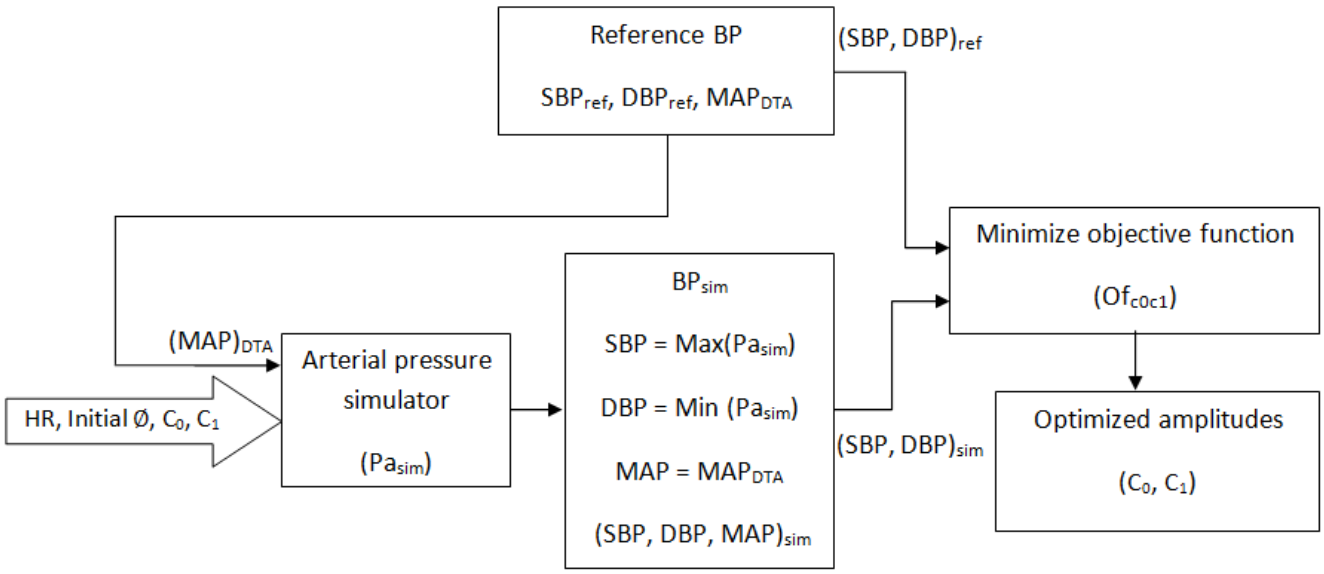

Fig. 3. Optimization of C_0 and C_1 parameters of the simulated arterial pressure.

between simulated and corresponding actual amplitude ratio of the oscillometric pulses at MAP. Parameters $a = 0.03$, $b = 3.3$, and $d = 0.08$ are the simulated cuff constants and are set at their initial values [13]. The transmural pressure $P_t(t)$ is the difference between the arterial pressure $P_a(t)$ and the CP $P_c(t)$

$$P_t(t) = P_a(t) - P_c(t). \tag{4}$$

$P_c(t)$ in (4) is replaced with the deflating CP, and the arterial pressure $P_a(t)$ is replaced by the customized simulated arterial pressure (P_{a_sim}). In order to construct and customize $P_a(t)$, the simulated arterial pressure in (5) is employed [13] and customized by replacing the MAP with $\mathrm{MAP_{DTA}}$, and optimizing the amplitude of the harmonics C_0, and C_1 (see Fig. 3). In addition, the model requires HR, and phase angle of the second harmonic (φ). The heart rate is replaced with the subject's heart-rate, and φ is replaced with its initial value equal to -1.2 radians [13]

$$P_a(t) = \mathrm{MAP} + C_0 \cos\left(2\pi \frac{\mathrm{HR}}{60} t\right) + C_1 \cos\left(4\pi \frac{\mathrm{HR}}{60} t + \varphi\right). \tag{5}$$

The HR is estimated by counting the number of the oscillometric pulses over the duration of the OMW, and the amplitudes of the harmonics C_0 and C_1 are optimized by minimizing the objective function Of_{c0c1} in (6). $\mathrm{SBP_{ref}}$ and $\mathrm{DBP_{ref}}$ are the reference systolic and diastolic pressures, while the corresponding simulated systolic and diastolic pressures are estimated from the maximum and minimum values of the simulated arterial pressure (P_{a_sim})

$$\mathrm{Of}_{c0c1} = (\mathrm{SBP_{ref}} - \mathrm{SBP_{sim}})^2 + (\mathrm{DBP_{ref}} - \mathrm{DBP_{sim}})^2 \tag{6}$$

$$\text{where } \mathrm{SBP_{sim}} = \mathrm{Max}(P_{a\_\mathrm{sim}}) \tag{7}$$

$$\mathrm{DBP_{sim}} = \mathrm{Min}(P_{a\_\mathrm{sim}}). \tag{8}$$

The simulated ALA model $A(t)$ in (3) is required to construct the simulated OMW ($\mathrm{OMW_{sim}}$). The ALA model has two components: $A(t) = A_1(t) + A_2(t)$, the slow-varying component $A_1(t)$ due to the deflating CP and the oscillating component $A_2(t)$ due to the arterial pressure oscillations.

The average BP at each heartbeat is equal to MAP, so the slow-varying component in (9) is found by replacing the $P_a(t)$ with $\mathrm{MAP_{DTA}}$. The oscillating component in (10) is extracted by subtracting the slow-varying component $A_1(t)$ from $A(t)$

$$A_1(t) = d\frac{\ln(a(\mathrm{MAP_{DTA}} - P_c(t)) + b)}{1 + e^{-c(\mathrm{MAP_{DTA}} - P_c(t))}} \tag{9}$$

$$A_2(t) = A(t) - A_1(t). \tag{10}$$

The oscillating component $A_2(t)$ is proportional to $\mathrm{OMW_{sim}}$ by φ [27]. The proportional factor φ is empirically initialized to 40 in this paper. This constant value is determined empirically to construct simulated OMWs with peaks and troughs amplitudes closer to the corresponding actual waveforms

$$\mathrm{OMW_{sim}} = \varphi \cdot A_2(t). \tag{11}$$

The simulated arterial pressure P_a, transmural pressure P_t, lumen area oscillations waveform $A(t)$, slow-varying component $A_1(t)$, and simulated oscillometric waveform $\mathrm{OMW_{sim}}$ of a sample simulated recording are shown in Fig. 4.

As stated before, the simulated and corresponding actual waveforms are compared to evaluate compliance parameter "c" of the model in (3). To this end, DTA is employed and oscillometric pulses at MAP are located for both actual and simulated waveforms, and differences between amplitude ratios of the simulated (R_{sim}) and corresponding actual (R_{act}) waveforms are minimized to optimize the parameter "c"

$$\mathrm{Of}_c = (R_{\mathrm{act}} - R_{\mathrm{sim}})^2. \tag{12}$$

Finally, the correlation between parameter "c" and R_{act} is investigated over all recordings for all data sets. Due to the good correlation of 98% over DS1, a linear regression model

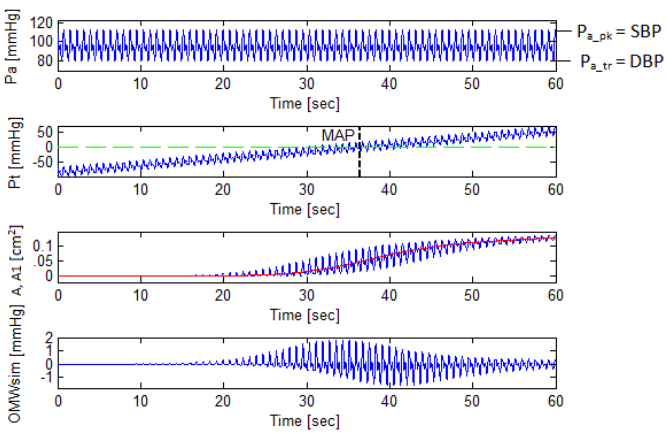

Fig. 4. ALA oscillations waveform and its components of a sample simulated recording. From the top, arterial pressure, transmural pressure, where at zero transmural pressure (green line), the arterial and CPs become equal to MAP, lumen area waveform (blue) and its slow-varying component (red), and the simulated oscillometric waveform at the bottom.

is derived to estimate parameter "c" of the ALA model in (3) directly from the corresponding R_{act}.

B. Estimation of the SBP and DBP

ALA oscillations are modeled by (13) and (14) for systolic and diastolic regions, respectively [24], [25]. The proposed ALA-based method is developed in the diastolic region, because the vessel underneath the cuff is under less external CP and can oscillate freely, so the parameter "c" of the model can be estimated accurately. To this end, the ALA model in the diastolic region (14) is employed to construct and customize the simulated oscillometric waveforms corresponding to the actual waveforms. The parameter "c" of the model in (14) is replaced with the estimated parameter "c" from Section III-A. The customized simulated waveforms are compared with corresponding actual waveforms to find the simulated arterial pressures at peak (P_{a_pk}) and trough (P_{a_tr}) of the OMWs, and estimate SBP and DBP, respectively

$$A(t) = \begin{cases} A_0 e^{a(P_a(t)-P_c(t))} \\ \qquad \text{for } P_a(t) \le P_c(t) - \text{systolicregion} & (13) \\ A_m - (A_m - A_0)e^{-c(P_a(t)-P_c(t))} \\ \qquad \text{for } P_a(t) \ge P_c(t) - \text{diastolicregion} & (14) \end{cases}$$

where A_0 is the lumen area at which the transmural pressure: $P_t(t) = P_a(t) - P_c(t)$ is zero, andA_m is the lumen area when the artery is fully expanded. Parameters "a" and "C" represent compliance parameters in the systolic and diastolic regions, respectively.

The oscillating component $A_2(t)$ in (16) is obtained by subtracting the slow-varying component in (15) from the ALA model in (14). The slow-varying component $A_1(t)$ is obtained by replacing $P_a(t)$ of the model in (14) with MAP_{DTA}

$$A_1(t) = A_m - (A_m - A_0)e^{-c(\text{MAP}_{\text{DTA}} - P_c(t))} \quad \text{for } P_a(t) \ge P_c(t) \tag{15}$$

$$A_2(t) = A_m - (A_m - A_0)e^{-c(P_a(t)-P_c(t))} - A_1(t) \quad \text{for } P_a(t) \ge P_c(t). \tag{16}$$

The oscillating component is proportional to the simulated waveform, so $\text{OMW}_{\text{sim}}(t)$ in (17) is obtained by multiplying the oscillating component with a proportional factor φ which is set to 40 for all recordings in this paper

$$\text{OMW}_{\text{sim}}(t) = \varphi \cdot A_2(t). \tag{17}$$

In order to estimate SBP as peak value of the arterial pressure pulses ($P_{a_{\text{pk}}}$), lumen areas A_0M, A_m, and P_{a_pk} of the ALA model in the diastolic region are optimized by minimizing the objective function Of_{SBP} in (18) (see Fig. 5)

$$\text{Of}_{\text{SBP}} = \sum_{i=1}^{\text{numberofpeaks}} (\text{pk}_{\text{act}\_i} - \text{pk}_{\text{sim}\_i})^2 \tag{18}$$

where pk_{act_i} and pk_{sim_i} are the actual and the corresponding simulated peak values of the oscillometric pulses in the diastolic region, respectively.

The compliance parameter "c" of the model is replaced with the "c" value that we derived earlier from the developed linear regression model. A_0 and A_m represent the ALAs at MAP and the area at which the area is fully expanded, respectively. P_{a_pk} is the arterial pressure at peaks of the oscillometric pulses which is considered as SBP after the optimization process is done, while pk_{act} and pk_{sim} represent the actual and corresponding simulated peaks of the oscillometric pulse at MAP, respectively. The objective function Of_{SBP} holds the sum of the squared differences between the actual (pk_{act}) and the corresponding simulated (pk_{sim}) peaks of the oscillometric pulses in the diastolic region. Of_{SBP} is minimized through an iteration process to optimize the initial parameters A_0, A_m and P_{a_pk}, and finally estimate the SBP.

The optimized ALAs, A_0, A_m, and the determined parameter "c" of the model are used to optimize the arterial pressure at troughs of the oscillometric pulses (P_{a_tr}) in the diastolic region by minimizing the objective function Of_{DBP} in (19), and estimate DBP (see Fig. 6)

$$\text{Of}_{\text{DBP}} = \sum_{i=1}^{\text{number of troughs}} (\text{tr}_{\text{act}\_i} - \text{tr}_{\text{sim}\_i})^2 \tag{19}$$

where tr_{act_i} and tr_{sim_i} are the actual and the corresponding simulated trough values of the oscillometric pulses in the diastolic region, respectively.

In Fig. 6, "c" is the estimated compliance parameter, while A_0 and A_m represent the optimized ALAs at MAP, and the area at which the area is fully expanded, respectively. P_{a_tr} is the arterial pressure at troughs of the oscillometric pulses, which is considered as DBP after the optimization process is done. tr_{act} and tr_{sim} represent the actual and corresponding simulated troughs of the oscillometric pulse at MAP, respectively, The objective function Of_{DBP} holds the sum of the squared differences between the actual (tr_{act}) and corresponding simulated (tr_{sim}) troughs of the oscillometric pulses in the diastolic region. Of_{DBP} is minimized through an iteration process to optimize the initial parameter $P_{a_{\text{tr}}}$ and finally estimate the DBP.

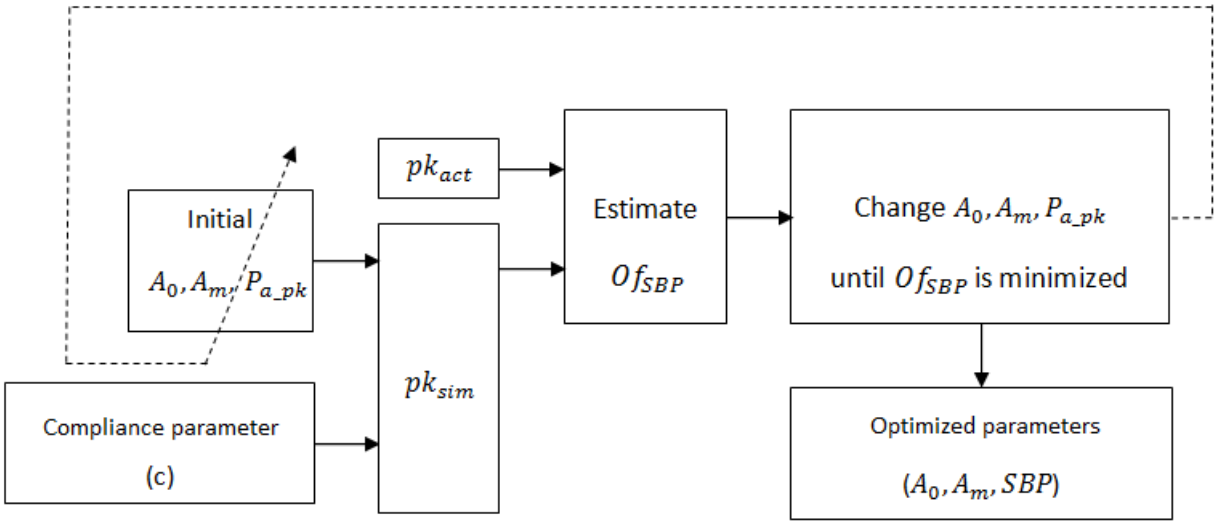

Fig. 5. Estimation of the SBP in the diastolic region.

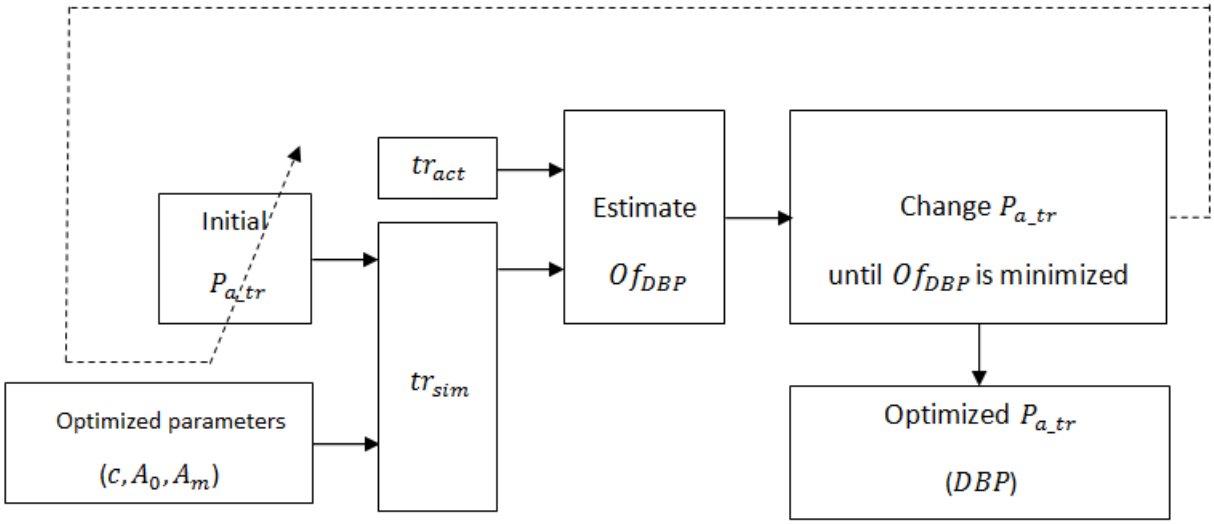

Fig. 6. Estimation of the DBP in the diastolic region.

IV. Experimental Results

In order to evaluate the proposed ALA-based estimation method, two data sets of healthy subjects (DS1, DS2) and one data set of patients with chronic cardiovascular diseases (DS3) are employed to estimate BP and compare the validated results with corresponding validated results estimated by the MAA and MMSA estimation algorithms. Each measurement of DS1 is provided together with two independent simultaneous reference readings observed by two nurses using a double stethoscope and the auscultatory method. The average of two readings is used as the reference BP to validate the results of the estimation methods. The DS2 is referenced by an FDA-approved monitor (Omron), and the DS3 is referenced by a professional FDA-approved monitor (BpTru). In order to compare the accuracy of the estimated pressures (SBP and DBP) by our proposed ALA-based method to those corresponding to MAA and MMSA estimation algorithms, we have compared the validated results of each estimation algorithm with the validated results of the ALA-based method. In order to validate the results over each data set, all measurements are compared with corresponding reference pressures and differences are recorded as errors. Mean error (ME), mean absolute error (MAE), and standard deviation of errors (STDE) about mean are calculated for all estimation methods. Finally, the validated results of the proposed ALA-based method are compared to corresponding validated results of the MAA and MMSA estimation algorithms over all data sets and improvements achieved by the proposed method are shown in Tables I–III.

A. Data Sets

1) DS1: DS1 comprises 85 healthy subjects composed of 48 males and 37 females aged from 12 to 80 years old. The OMWs are acquired using a wrist BP monitor

TABLE I

VALIDATED RESULTS OF MAA, MMSA, AND PROPOSED ALA-BASED METHOD AND THE IMPROVEMENTS FOR DATA SET DS1 OVER 85 HEALTHY SUBJECTS

DS1		BP estimation algorithms						Improvement %			
		MAA		MMSA		ALA-based		relative to MAA		relative to MMSA	
		SBP (mmHg)	DBP (mmHg)	SBP (mmHg)	DBP (mmHg)	SBP (mmHg)	DBP (mmHg)	SBP	DBP	SBP	DBP
425 Recordings	MAE	7.50	5.59	13.7	6.98	5.94	2.98	20.8	46.7	56.7	57.3
	STDE	6.80	4.84	10.2	6.32	5.11	2.59	24.9	46.5	50.0	59.0
	ME	1.79	0.67	-7.56	1.61	-0.08	0.57	95.5	14.9	98.9	64.4

TABLE II

VALIDATED RESULTS OF MAA, MMSA, AND PROPOSED ALA-BASED METHOD AND THE IMPROVEMENTS FOR DATA SET DS2 OVER TEN HEALTHY SUBJECTS

DS2		BP estimation algorithms						Improvement %			
		MAA		MMSA		ALA-based		relative to MAA		relative to MMSA	
		SBP (mmHg)	DBP (mmHg)	SBP (mmHg)	DBP (mmHg)	SBP (mmHg)	DBP (mmHg)	SBP	DBP	SBP	DBP
150 Recordings	MAE	5.66	3.35	6.17	4.59	5.13	3.18	9.49	5.19	16.9	30.9
	STDE	4.59	2.75	5.14	4.76	3.60	2.58	21.6	6.16	30.0	45.8
	ME	-4.40	-1.23	-0.74	-0.25	0.23	0.09	94.8	92.7	68.9	64.0

TABLE III

VALIDATED RESULTS OF MAA, MMSA, AND PROPOSED ALA-BASED METHOD AND THE IMPROVEMENTS FOR DATA SET DS3 OVER 13 SICK SUBJECTS

DS3		BP estimation algorithms						Improvement %			
		MAA		MMSA		ALA-based		relative to MAA		relative to MMSA	
		SBP (mmHg)	DBP (mmHg)	SBP (mmHg)	DBP (mmHg)	SBP (mmHg)	DBP (mmHg)	SBP	DBP	SBP	DBP
78 Recordings	MAE	12.2	8.40	8.98	7.88	7.49	6.20	38.6	26.2	16.6	21.4
	STDE	8.36	5.22	8.92	5.26	6.20	5.05	25.9	3.26	30.6	3.99
	ME	-11.1	-7.82	-4.99	-6.93	-0.83	0.18	92.6	97.7	83.4	97.4

(UFIT TEN-10 by Biosign Technologies Inc.) in accordance with the recommendations of the ANSI/AAMI/ISO standard [28]. Five sets of oscillometric wrist BP measurements were obtained repeatedly with 1 min delay from each subject resulting in 425 measurements. The reference values for the corresponding recordings are obtained by averaging the two measurements acquired by two nurses using a double stethoscope.

2) DS2: DS2 comprises ten healthy subjects composed of six males and four females aged from 24 to 63 years old. The OMWs are acquired using a prototype designed in biomedical research laboratory of the University of Ottawa [29]. Five sets of oscillometric arm BP measurements were obtained from each subject in three days resulting in 150 measurements. The reference values for the corresponding recordings are obtained from a FDA—approved Omron monitor (HEM-790IT). The cuff includes a built in dry electrode, and wristband placed on the right hand of the subjects is used as a second electrode for simultaneous electrocardiogram (ECG) recording.

3) DS3: DS3 comprises 13 patients composed of five males and eight females aged from 46 to 85 years old with various chronic conditions including atrial fibrillation, hypertension, and subjects with obesity. The OMWs are acquired using a Health Parametrics Inc. prototype device (EABPM-01). Six sets of oscillometric arm BP measurements were obtained repeatedly from each patient resulting in 78 measurements. The reference values for corresponding recordings are obtained from a clinically standard arm BpTru monitor (BPM-100). A dry flexible electrode is made of conductive fabric embedded inside the cuff, and a second electrode is placed on the

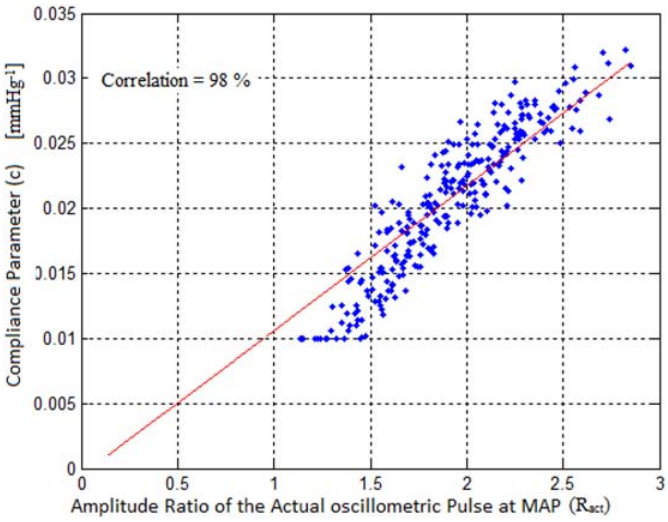

Fig. 7. Linear regression between amplitude ratio of the actual oscillometric pulse at MAP (R_{act}) and corresponding compliance parameter (c) in the diastolic region over 425 recordings of the data set DS1.

device, such that the patient touches are used for simultaneous ECG recording.

B. Results

In order to derive the regression model, we observed correlations between R_{act} and the corresponding parameter "c" of the ALA model in (3) over all data sets. The correlations were approximately the same over all data sets, but we derived the regression model from DS1, because it includes more trials acquired from more subjects with more variety of ages. Due to the good correlation of 98% between R_{act} and corresponding "c" over DS1, the linear regression model in (20) was derived by fitting a linear regression line between R_{act} and corresponding "c" (see Fig. 7)

$$c = 0.01101 \cdot R_{\text{act}} - 0.0003981. \tag{20}$$

The regression model in (20) is used to provide the parameter "c" of the ALA model in (14) directly from corresponding R_{act} over all data sets. The estimated parameter "c" is used to optimize parameters A_0 and A_m and estimate SBP by minimizing differences between peaks of the actual and corresponding simulated pulses in the diastolic region (see Fig. 5). Next, parameters "c," A_0, and A_m are used to estimate DBP by minimizing differences between troughs of the actual and corresponding simulated pulses in the diastolic region (see Fig. 6). Estimated pressures from MAA, MMSA, and the proposed ALA-based method are validated against corresponding references and compared to estimate improvements achieved by the proposed method. Results are shown in Tables I–III.

The oscillometric recording device for DS1 returns two waveforms: the deflating CP and the discrete derivative of the CDC which we used to extract the OMW. The CDC is retrieved by integrating the derivative of the recorded CDC, and the detrending approach is employed to extract the OMW in (21) by subtracting the recorded CP from corresponding CDC. The OMWE in (22) is formed by subtracting troughs of the oscillometric pulses from corresponding peaks

$$\text{OMW} = \text{CDC} - \text{CP} \tag{21}$$

$$\text{OMWE} = \text{pk} - \text{tr}. \tag{22}$$

The proposed ALA-based method is tested on DS1 including 425 recordings obtained from 85 healthy subjects, and estimated pressures are validated against references. The MAE, ME, and STDE of the validated results are calculated and compared to the corresponding values obtained from the MAA and MMSA estimation algorithms to estimate the improvements achieved by ALA-based method relative to MAA and MMSA estimation algorithms (see Table I).

In order to have more confidence on the results, we repeated the testing procedure on DS2 comprising 150 recordings obtained from 10 healthy subjects. The overall procedure is the same as for DS1, except for OMW which is obtained from the recorded CDC utilizing a second-order bandpass digital Butterworth filter with a lower cutoff frequency of 0.5 Hz and an upper cutoff frequency of 20 Hz. The validated results and improvements achieved by ALA-based method relative to MAA and MMSA estimation algorithms are shown in Table II.

Finally, in order to investigate accuracy of the proposed ALA-based method on obese subjects and patients with cardiovascular diseases such as hypertension, and atrial fibrillation, we repeated the testing procedure on DS3 comprising 78 recordings obtained from 13 healthy subjects. The overall procedure is the same as for DS2. The validated results and improvements achieved by ALA-based method relative to MAA and MMSA estimation algorithms are shown in Table III.

V. Measurement Uncertainty Analysis

The main causes of measurement uncertainty in our BP measurement systems are the electronics of the recording device and the implemented BP estimation method. The utilized recording devices were all calibrated before measurements with small variations within permitted tolerances, so the hardware side of the measurement systems has no significant contribution to the measurement uncertainty of the estimated pressures. The BP estimation method is the main source of measurement uncertainty. It is important to mention that all sources of measurement uncertainty, except the BP estimation methods, influence the recorded OMW, which is the same input for all estimation methods. Therefore, measurement uncertainties of the measurement systems will differ based on the estimation methods. In other words, the measurement uncertainty will not change if we do not change the estimation method. More importantly, our goal is to compare the measurement uncertainty of the proposed ALA-based method with that of the MAA and MMSA estimation algorithms. As a result, measurement uncertainties of all estimation methods are estimated and compared to evaluate level of improvements achieved by the proposed ALA-based method relative to the MAA and MMSA estimation algorithms.

Measurement uncertainty can be evaluated statistically [30]. This method provides a confidence interval (CI), which is

TABLE IV

IMPROVEMENTS IN MEASUREMENT UNCERTAINTIES OF THE BP MEASUREMENTS ACHIEVED BY THE ALA-BASED METHOD RELATIVE TO THE MAA AND MMSA ALGORITHMS

All Recordings		Improvement % relative to MAA		Improvement % relative to MMSA	
		SBP	DBP	SBP	DBP
Uncertainty (U)	DS1 (425)	1.50	17.8	57.6	55.8
	DS3 (78)	10.7	1.50	19.6	17.0

defined as the "margin within which the 'true value' being measured can be said to lie, with a given level of confidence" [31]. The level of confidence expresses the degree of confidence in the result [30]. The standard uncertainty $u(x)$ over n measurements for measurand x in (23) is obtained from the square root of the variance of the measurements divided by n [31]

$$u(x) = \sqrt{\frac{S_x^2}{n}}. \tag{23}$$

In our case, x is the SBP or DBP estimated by each of the three BP estimation algorithms (MAA, MMSA, and ALA-based method), and S_x^2 is the variance of the estimated SBP or DBP about their corresponding mean ($\overline{x}$) over each subject.

In order to find the CI, a coverage factor (K) is required to be multiplied by $u(x)$ and provide expanded uncertainty U in (24) [30]. The coverage factor depends on the probability density function of the measurand. For a normal distribution, if $K = 1$, then CI $= \overline{x} \pm u(x)$ at a level of confidence of 68.3%. If $K = 2$, then CI $= \overline{x} \pm 2u(x)$ at a level of confidence of 95%. If $K = 3$, then CI $= \overline{x} \pm 3u(x)$ at a level of confidence of 99.7% [32]

$$U = Ku(x) \tag{24}$$

$$CI = \overline{x} \pm U. \tag{25}$$

In order to analyze measurement uncertainties for the measured SBP and DBP estimated by MAA, MMSA, and proposed ALA-based method over healthy and sick subjects, we would ideally need a large number of repeated BP measurements from each subject, because uncertainty analysis of the measurements over different subjects or one subject in different days has no value. Moreover, if the number of measurements per subjects exceeds five or maximum six measurements at a time, the intrinsic BP variation will be high and affect accuracy of the measurement uncertainty analysis for that specific subject. Therefore, we can get maximum five to six measurements from each subject at a time to perform measurement uncertainty analysis.

Statistically, when the number of measurements per subjects is too small to meet the conditions of the central limit theorem, the corresponding distribution of the measurements can be taken as a t-distribution [33], [34]. The variance in (23) denoted by S_x^2 will be the sample variance of a small number of BP measurements about the mean. If n measurements of BP are carried out sequentially in a measurement session over one patient, and there are m patients (for a total of $n \times m$ measurements $\{x_{ik} | k = 1..m;\ i = 1..n\}$), m standard uncertainties (u_k) for each data set each with n measurements can be calculated in terms of the corresponding experimental variance s_k^2 [30]

$$u_k = \sqrt{\frac{s_k^2}{n}}, \quad k = 1..m$$

$$\text{where} s_k^2 = \frac{\sum_{i=1}^{n} (x_i - \bar{x})^2}{n-1} \quad \text{and } \bar{x} = \frac{\sum_{i=1}^{n} x_i}{n}. \tag{26}$$

In order to compare the three BP estimation techniques (MAA, MMSA, and ALA-based method), we calculated the global uncertainty in terms of the experimental variance $\{S_k^2 | k = 1..m\}$ per measurement session using equation similar to the pooled estimate of variance S_p^2 [30]

$$u = \frac{S_P}{\sqrt{m}} \tag{27}$$

$$\text{with } S_P^2 = \frac{\sum_{k=1}^{m} \upsilon_k S_k^2}{\sum_{k=1}^{m} \upsilon_k}$$

$$\text{where } \upsilon_k = n_k - 1 \text{ are the degrees of freedom.} \tag{28}$$

In our case, we ran the same number n of measurements in each session, such that

$$S_P^2 = \frac{\sum_{k=1}^{m} S_k^2}{m}. \tag{29}$$

The coverage factor K is estimated from the t-distribution table [33] with degree of freedom equal to $(n-1)$ at the confidence level of 95%. The coverage factor is 2.776 for each set of $n = 5$ measurements of the DS1, and 2.571 for each set of $n = 6$ measurements of the DS3.

The DS1 includes trials of 85 healthy subjects each with five repeatedly measured BP resulting in total of 425 measurements with average of corresponding two nurse reference values. The DS2 includes trials of ten healthy subjects with singular measurements performed in different days and different times and, as such, this data set was not suitable for uncertainty analysis. The DS3 includes trials of 13 sick subjects each with 6 repeatedly measured BP resulting in total of 78 measurements with corresponding reference values. Therefore, we analyzed uncertainties of the measurements over DS1 comprising healthy subjects and DS3 comprising sick subjects.

TABLE V

IMPROVEMENTS IN CONFIDENCE INTERVALS OF THE BP MEASUREMENTS ACHIEVED BY THE ALA-BASED METHOD RELATIVE TO THE MAA AND MMSA ALGORITHMS

All Recordings		Improvement % relative to MAA		Improvement % relative to MMSA	
		SBP	DBP	SBP	DBP
Confidence Interval (CI)	DS1 (425)	3.70	22.3	56.2	56.6
	DS3 (78)	13.0	1.90	15.0	20.5

Each subject of the DS1 is analyzed for MAA, MMSA, and ALA-based method over its $n = 5$ BP readings and measurement uncertainties are estimated for each of the $m = 85$ subjects separately. Similarly, each subject of DS3 is analyzed for MAA, MMSA, and ALA-based method over its $n = 6$ trials and measurement uncertainties are estimated for each of the $m = 13$ subjects.

Improvements in measurement uncertainties by the proposed ALA-based method are estimated relative to MAA and MMSA BP estimation algorithms for healthy and sick subjects and shown in Table IV.

CIs of the estimated BP at a confidence level of 95% are calculated for the proposed ALA-based method over data sets DS1 and DS3, and compared to the corresponding values from the MAA and MMSA estimation algorithms. The proposed method has improved CIs of the estimated BP significantly. Improvements in CIs achieved by the proposed ALA-based method are calculated relative to the MAA and MMSA estimation algorithms for healthy and sick subjects and are shown in Table V.

VI. CONCLUSION

Although the current commercially available oscillometric BP monitors have successfully fulfilled validation protocols in various standards developed by the International Organization for Standardization, the American Association for the Advancement of Medical Instrumentation [35], or the British Hypertension Society [25], they are not reliable in some categories of patients who need to see the doctor for accurate BP measurements [36]. The proposed ALA-based method has significantly improved the accuracy of the BP measurement compared to the two popular oscillometric MAA and MMSA estimation algorithms for both healthy and sick subjects. Moreover, unlike the other approaches used in oscillometry, the proposed method does not require coefficients that are determined empirically from specific population studies.

According to the results listed in Tables I–III, we observed up to 20.8% and 46.7% improvements in MAE, 95.5% and 14.9% in ME, and 24.9% and 46.5% improvements in STDE for SBP and DBP, respectively, compared with MAA, for healthy subjects. Similarly, improvements were up to 56.7% and 57.3% in MAE, 98.9% and 64.4% in ME, and 50% and 59% in STDE for SBP and DBP, respectively, compared with MMSA, for healthy subjects.

Also, we observed 38.6% and 26.2% improvements in MAE, 92.6% and 97.7% in ME, and 25.9% and 3.26% improvements in STDE for SBP and DBP, respectively, compared with MAA, for the sick subjects. Similarly, improvements were 16.6% and 21.4% in MAE, 83.4% and 97.4% in ME, and 30.6% and 3.99% in STDE for SBP and DBP, respectively, compared with MMSA, for sick subjects.

Finally, the proposed method improved uncertainty of the measurements up to 57.6% and 55.8% for healthy subjects, and 19.6% and 17% for sick subjects, for SBP and DBP, respectively.

REFERENCES

[1] M. Nitzan, "Automatic noninvasive measurement of arterial blood pressure," *IEEE Instrum. Meas. Mag.*, vol. 14, no. 1, pp. 32–37, Feb. 2011.

[2] B. S. Alpert, D. Quinn, and D. Gallick, "Oscillometric blood pressure: A review for clinicians," *J. Amer. Soc. Hypertension*, vol. 8, no. 12, pp. 930–938, Dec. 2014.

[3] M. Forouzanfar, H. R. Dajani, V. Z. Groza, M. Bolic, S. Rajan, and I. Batkin, "Oscillometric blood pressure estimation: Past, present, and future," *IEEE Rev. Biomed. Eng.*, vol. 8, pp. 44–63, May 2015.

[4] M. Forouzanfar, H. R. Dajani, V. Z. Groza, M. Bolic, and S. Rajan, "Feature-based neural network approach for oscillometric blood pressure estimation," *IEEE Trans. Instrum. Meas.*, vol. 60, no. 8, pp. 2786–2796, Aug. 2011.

[5] J. A. de la O Serna, "Taylor–Fourier analysis of blood pressure oscillometric waveforms," *IEEE Trans. Instrum. Meas.*, vol. 62, no. 9, pp. 2511–2518, Sep. 2013.

[6] J. A. de la O Serna, W. Van Moer, and K. Barbe, "Using alternating Kalman filtering to analyze oscillometric blood pressure waveforms," *IEEE Trans. Instrum. Meas.*, vol. 62, no. 10, pp. 2621–2628, Oct. 2013.

[7] S. Lee *et al.*, "Oscillometric blood pressure estimation based on maximum amplitude algorithm employing Gaussian mixture regression," *IEEE Trans. Instrum. Meas.*, vol. 62, no. 12, pp. 3387–3389, Dec. 2013.

[8] K. Barbe, W. Van Moer, and D. Schoors, "Analyzing the Windkessel model as a potential candidate for correcting oscillometric bloodpressure measurements," *IEEE Trans. Instrum. Meas.*, vol. 61, no. 2, pp. 411–418, Feb. 2012.

[9] W. Van Moer, L. Lauwers, D. Schoors, and K. Barbe, "Linearizing oscillometric blood-pressure measurements: (Non)sense?" *IEEE Trans. Instrum. Meas.*, vol. 60, no. 4, pp. 1267–1275, Apr. 2011.

[10] E. Balestrieri and S. Rapuano, "Instruments and methods for calibration of oscillometric blood pressure measurement devices," *IEEE Trans. Instrum. Meas.*, vol. 59, no. 9, pp. 2391–2404, Sep. 2010.

[11] J. N. Amoore, "Extracting oscillometric pulses from the cuff pressure: Does it affect the pressures determined by oscillometric blood pressure monitors?" *Blood Pressure Monitor.*, vol. 11, no. 5, pp. 269–279, Oct. 2006.

[12] S. Chen, V. Z. Groza, M. Bolic, and H. R. Dajani, "Assessment of algorithms for oscillometric blood pressure measurement," in *Proc. IEEE Int. Instrum. Meas. Technol. Conf. (I2MTC)*, Singapore, May 2009, pp. 1763–1767.

[13] G. Drzewiecki, R. Hood, and H. Apple, "Theory of the oscillometric maximum and the systolic and diastolic detection ratios," *Ann. Biomed. Eng.*, vol. 22, no. 1, pp. 88–96, Jan. 1994.

[14] S. Lewington, R. Clarke, N. Qizilbash, R. Peto, and R. Collins, "Age-specific relevance of usual blood pressure to vascular mortality: A meta-analysis of individual data for one million adults in 61 prospective studies," *Lancet*, vol. 360, pp. 1903–1913, 2002.

[15] K. Soueidan, S. Chen, H. R. Dajani, M. Bolic, and V. Z. Groza, "Augmented blood pressure measurement through the noninvasive estimation of physiological arterial pressure variability," *Phys. Meas.*, vol. 33, no. 6, pp. 881–899, 2012.

[16] H. Smulyan and M. E. Safar, "Blood pressure measurement: Retrospective and prospective views," *J. Amer. Hypertension*, vol. 24, no. 6, pp. 628–634, Jun. 2011.

[17] P. D. Baker, D. R. Westenskow, and K. Kuck, "Theoretical analysis of non-invasive oscillometric maximum amplitude algorithm for estimating mean blood pressure," *Med. Biol. Eng. Comput.*, vol. 35, no. 3, pp. 271–278, May 1997.

[18] S. Lee, M. Bolic, V. Z. Groza, H. R. Dajani, and S. Rajan, "Confidence interval estimation for oscillometric blood pressure measurements using bootstrap approaches," *IEEE Trans. Instrum. Meas.*, vol. 60, no. 10, pp. 3405–3415, Oct. 2011.

[19] S. Lee, S. Rajan, H. Dajani, V. Groza, and M. Bolic, "Determination of blood pressure using Bayesian approach," in *Proc. Int. Conf. IEEE Instrum. Meas. Technol.*, May 2011, pp. 1–5.

[20] J. N. Amoore *et al.*, "Effect of the shapes of the oscillometric pulse amplitude envelopes and their characteristic ratios on the differences between auscultatory and oscillometric blood pressure measurements," *Blood Pressure Monitor.*, vol. 12, no. 5, pp. 297–305, Oct. 2007.

[21] S. Chen, M. Bolic, V. Z. Groza, H. R. Dajani, I. Batkin, and S. Rajan, "Extraction of breathing signal and suppression of its effects in oscillometric blood pressure measurement," *IEEE Trans. Instrum. Meas.*, vol. 60, no. 5, pp. 1741–1750, May 2011.

[22] I. Koohi, I. Batkin, V. Z. Groza, S. Shirmohammadi, H. R. Dajani, and S. Ahmad, "Coefficient-free blood pressure estimation based on arterial lumen area oscillations in oscillometric methods," in *Proc. 9th Int. Symp. Intell. Signal Process. (WISP)*, Siena, Italy, May 2012, pp. 1–6.

[23] I. Koohi, S. Ahmad, I. Batkin, V. Z. Groza, S. Shirmohammadi, and H. R. Dajani, "Dynamic threshold algorithm to evaluate trustworthiness of the estimated blood pressure in oscillometry," *IEEE Instrum. Meas. Mag.*, vol. 19, no. 5, pp. 26–35, Oct. 2016.

[24] M. Forouzanfar, S. Ahmad, I. Batkin, H. R. Dajani, V. Z. Groza, and M. Bolic, "Coefficient-FREE blood pressure estimation based on pulse transit time–cuff pressure dependence," *IEEE Trans. Biomed. Eng.*, vol. 60, no. 7, pp. 1814–1824, Jul. 2013.

[25] E. O'Brien, J. Petrie, W. Littler, M. de Swiet, P. L. Padfield, and K. O'Malley, "The British hypertension society protocol for the evaluation of automated and semi-automated blood pressure measuring devices with special reference to ambulatory systems," *J. Hypertension*, vol. 8, no. 7, pp. 600–607, 1990.

[26] R. Raamat, J. Talts, K. Jagomägi, and E. Länsimies, "Mathematical modeling of non-invasive oscillometric finger mean blood pressure measurement by maximum oscillation criterion," *Med. Biol. Eng. Comput.*, vol. 37, no. 6, pp. 784–788, Nov. 1999.

[27] F. K. Forster and D. Turney, "Oscillometric determination of diastolic, mean and systolic blood pressure—A numerical model," *J. Biomech. Eng.*, vol. 108, no. 4, pp. 359–364, Nov. 1986.

[28] *Non-Invasive Sphygmomanometers—Part 2: Clinical Validation of Automated Measurement Type*, ANSI/AAMI/ISO Standard 81060-2, Arlington, TX, USA, 2009.

[29] S. Ahmad *et al.*, "Electrocardiogram-assisted blood pressure estimation," *IEEE Trans. Biomed. Eng.*, vol. 59, no. 3, pp. 608–618, Mar. 2012.

[30] *Evaluation of Measurement data - Guide to the Expression of Uncertainty in Measurement (GUM 1995 With Minor Corrections)*, document JCGM 100:2008, Paris, BIPM, IEC, IFCC, ILAC, ISO, IUPAC, IUPAP and OIML Joint Committee for Guides in Metrology, 2008.

[31] S. A. Bell, "A Beginner's Guide to Uncertainty of Measurement," Measurement Good Practice Guide No. 11, National Physical Laboratory, UK, Issue 2, 2001. Available from the NPL web site: www.npl.co.uk/publications/uncertainty-guide/

[32] A. Ferrero and S. Salicone, "Measurement uncertainty," *IEEE Instrum. Meas. Mag.*, vol. 9, no. 3, pp. 44–51, Jun. 2006.

[33] D. Shafer and Z. Zhang, *Introductory Statistics*. Washington, DC, USA: Saylor Academy, 2012.

[34] *Evaluation of Measurement Data - An Introduction to the 'Guide to the Expression of Uncertainty in Measurement' and Related Documents*, document JCGM 104:2009, Paris, BIPM, IEC, IFCC, ILAC, ISO, IUPAC, IUPAP and OIML Joint Committee for Guides in Metrology, 2009.

[35] W. B. White *et al.*, "National standard for measurement of resting and ambulatory blood pressures with automated sphygmomanometers," *J. Hypertension*, vol. 21, no. 4, pp. 504–509, 1993.

[36] G. S. Stergiou, P. Lourida, D. Tzamouranis, and N. M. Baibas, "Unreliable oscillometric blood pressure measurement: Prevalence, repeatability and characteristics of the phenomenon," *J. Human Hypertension*, vol. 23, no. 12, pp. 794–800, 2009.

Iraj Koohi received the B.Sc. degree in electrical engineering from the K. N. Toosi University of Technology, Tehran, Iran, in 1990, the M.Sc. degree in industrial engineering from the Mazandaran University of Science and Technology, Babol, Iran, in 1997, and the Ph.D. degree in industrial engineering from the Iran University of Science and Technology, Tehran, in 2001.

He was a Faculty Member at Islamic Azad University, Tehran, for 13 years. He has over ten years of management experience in several industrial, design, and construction companies in Tehran. He is currently a Research Assistant and a Ph.D. Candidate of electrical and computer engineering with the School of Electrical Engineering and Computer Science, University of Ottawa, Ottawa, ON, Canada. He received the Queen Elizabeth Scholarship in Science and Technology.

Izmail Batkin received the M.S. and Ph.D. degrees in theoretical physics from Voronezh State University, Voronezh, Russia, in 1965 and 1969, respectively, and the Dr.Sci. degree in nuclear physics from Leningrad State University, Saint Petersburg, Russia, in 1982.

He was a Full Professor with Voronezh State University and an Adjunct Professor with Carleton University, Ottawa, ON, Canada. He was the Chief Scientist with Advanced Bioelectric Corporation and Biopeak Corporations, Ottawa, where he is the Founder. His research has focused on noninvasive monitoring of physiological parameters. He was involved in the successful development and testing of a new generation of wearable physiological electrodes and monitors for the home and clinical environments. He is currently a Research Consultant with the School of Electrical Engineering and Computer Science, University of Ottawa, Ottawa. He has authored over 180 refereed papers—many in top notch journals, such as the *Physical Review*, the *Journal of Physics*, the *Soviet Journal of Nuclear Physics*, the IEEE TRANSACTIONS ON BIOMEDICAL ENGINEERING, the IEEE TRANSACTIONS ON INSTRUMENTATION AND MEASUREMENTS, and the *Journal of Critical Care*, and holds one patent. His current research interests include theoretical and nuclear physics, and medical physics.

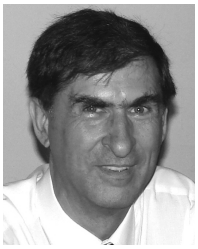

Voicu Z. Groza (M'97–SM'02–F'11) received the Dipl.Ing. degree in computer engineering and the Dr.-Ing. degree in electrical engineering from the Polytechnic Institute of Timisoara, Timisoara, Romania, in 1972 and 1985, respectively.

He was a Professor with the Polytechnic University of Timisoara. He has been with the University of Ottawa, Ottawa, ON, Canada, since 1996, where he is currently a Professor with the School of Electrical Engineering and Computer Science. He has authored over 300 technical papers, two books, and holds five patents. His current research interests include biomedical instrumentation and measurements, and high-speed data acquisition systems and its applications.

Dr. Groza is a fellow of the Engineering Institute of Canada. He held leadership roles on the Organizing and Technical Program Committees of numerous international conferences, such as the IEEE International Symposium on Medical Measurement and Applications from 2008 to 2015, the IEEE International Conference on Instrumentation and Measurement, and the IEEE Canadian Conference on Electrical and Computer Engineering. He has been volunteering in the frame of the IEEE Instrumentation and Measurement Society at the Ottawa Chapter and the World Wide Society Administration Level. He serves as the Chair of the IEEE Working Group on Standard for Objective Measurement of Systemic Arterial Blood Pressure in Humans.

Shervin Shirmohammadi (M '04–SM '04–F '17) received his Ph.D. in Electrical Engineering from the University of Ottawa, Canada, where he is currently a Professor with the School of Electrical Engineering and Computer Science. He is Director of the Distributed and Collaborative Virtual Environment Research Laboratory, doing research in multimedia systems and networks, including measurement techniques for network, video streaming, and health systems. The results of his research, funded by more than $13 million from public and private sectors, have led to over 300 publications, including more than 70 journal papers, over 65 researchers trained at the postdoctoral, PhD, and Master's levels, over 20 patents and technology transfers to the private sector, and a number of awards. He is the Editor-in-Chief of IEEE Transactions on Instrumentation and Measurement, Associate Editor of ACM Transactions on Multimedia Computing, Communications, and Applications, and an Associate Editor of IEEE Transactions on Circuits and Systems for Video Technology. He was the Associate Editor-in-Chief of IEEE Transactions on Instrumentation and Measurement in 2013 and 2016, Associate Editor-in-Chief of IEEE Instrumentation and Measurement magazine in 2014 and 2015, and an Associate Editor of Springer's Journal of Multimedia Tools and Applications from 2004 to 2012.

He has been an IMS AdCom member since 2014, and has served as the Vice President of its Membership Development Committee since 2014, as well as a member of the IEEE I2MTC Board of Directors from 2014 to 2016.

Dr. Shirmohammadi is an IEEE Fellow for contributions to multimedia systems and network measurements, a University of Ottawa Gold Medalist, a licensed Professional Engineer in Ontario, and a Lifetime Professional Member of the ACM.

Hilmi R. Dajani (M'07–SM'11) received the B.Eng. degree in electrical engineering from McMaster University, Hamilton, ON, Canada, in 1987, and the M.A.Sc. degree in electrical and computer engineering and the Ph.D. degree in electrical and computer engineering (collaborative program in biomedical engineering) from the University of Toronto, Toronto, ON, in 1991 and 2004, respectively.

He has over 20 years of experience in developing systems for measuring and analyzing various physiological signals. He has also managed technical projects in a hospital setting and the biomedical technology industry. He is currently an Associate Professor with the School of Electrical Engineering and Computer Science, University of Ottawa, Ottawa, ON, and also the Associate Director of the Ottawa-Carleton Institute of Biomedical Engineering, Ottawa. His area of expertise is in applied signal processing and instrumentation for biomedical applications. His current research interests include developing new approaches for assessing cardiovascular and respiratory function.

Saif Ahmad received the B.Sc. degree in electrical engineering from Aligarh Muslim University, Aligarh, India, in 1996, the M.Sc. degree in computer science from the University of Birmingham, Birmingham, U.K., in 2001, and the Ph.D. degree in computer science from the University of Surrey, Guildford, U.K., in 2007.

He is currently a Research Associate with the School of Electrical Engineering and Computer Science, University of Ottawa, Ottawa, ON, Canada. He is also the Co-Founder and the Chief Technology Officer of Health Parametrics Inc., Ottawa, which is a University of Ottawa spinoff developing novel technology related to electrocardiogram-assisted blood pressure monitoring. He has authored over 15 papers in international peer-reviewed journals and conference proceedings, and holds a Canadian patent in his name. His current research interests include developing innovative biosensors, systems, and applications for monitoring human health, wellness, and fitness.

Dr. Ahmad also serves as a Reviewer of several IEEE and medical journals.